①Top panel

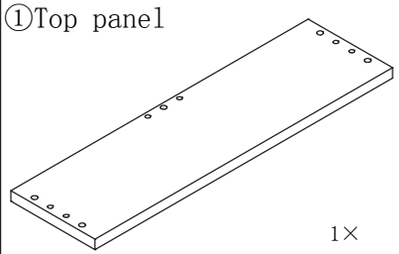

1×

②End panel

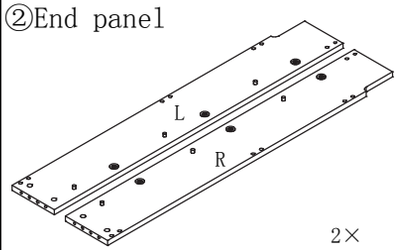

2×

③Back puller

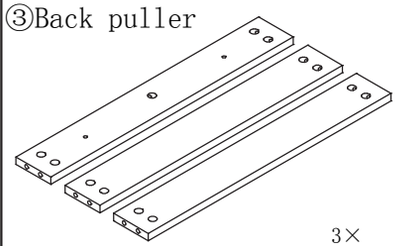

3×

④Apron board

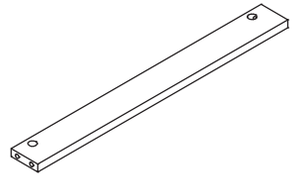

1×

⑤Drawer front panel

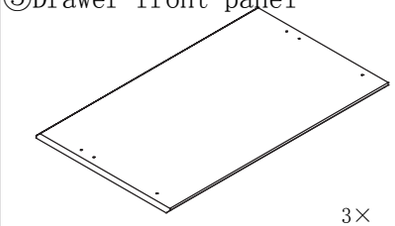

3×

⑥Drawer inner panel 1

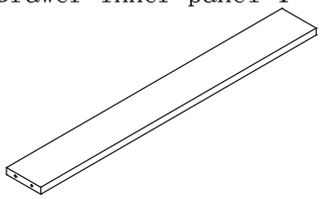

3×

⑦Drawer inner panel 2

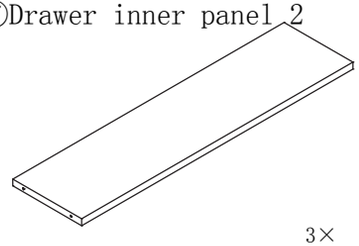

3×

⑧Shoe cabinet framework

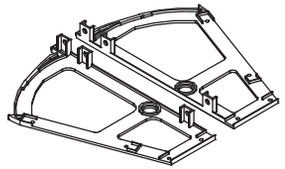

b×
6

3×

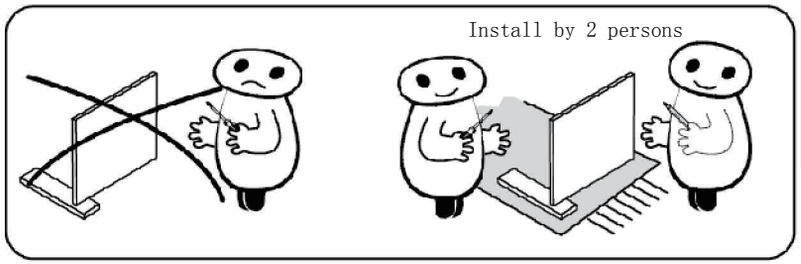

A. Dowel

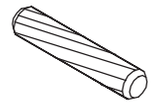

8×

B. Cam lock

19×

C. Cam pin

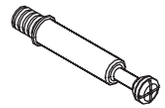

19×

E. Japanese-made nails (color zinc)

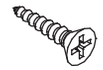

(42+1)×

F. Japanese-made nails (white zinc)

(6+1)×

G. Wood screw

2×

H. Expansion adhesive (cyan)

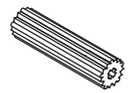

2×

I. Dual-purpose Screwdriver

1×

Step 1

Attention:First of all, put a piece of cartonor rug on the floor,and then begin toinstall the panels, so as to prevent the parts from scratch

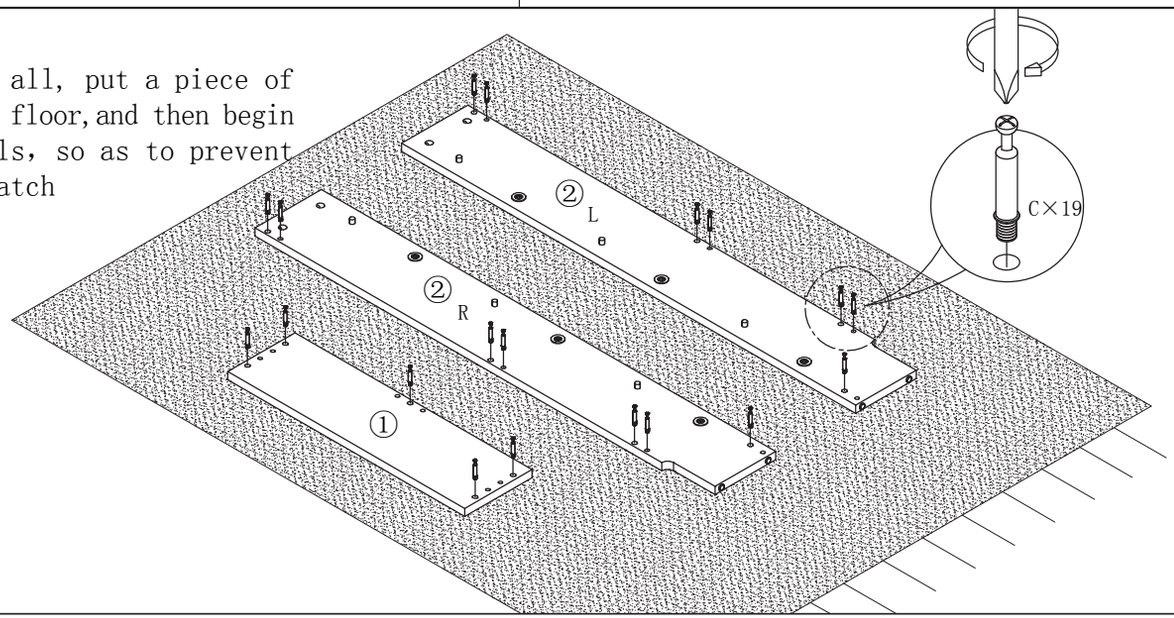

Model	GF531-0611
Size	600*170*1170H

Step 2

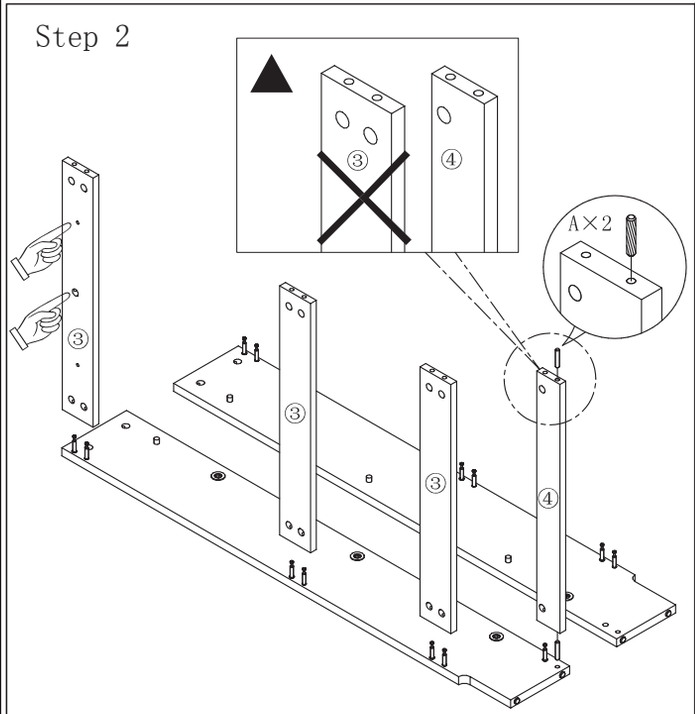

Step 3

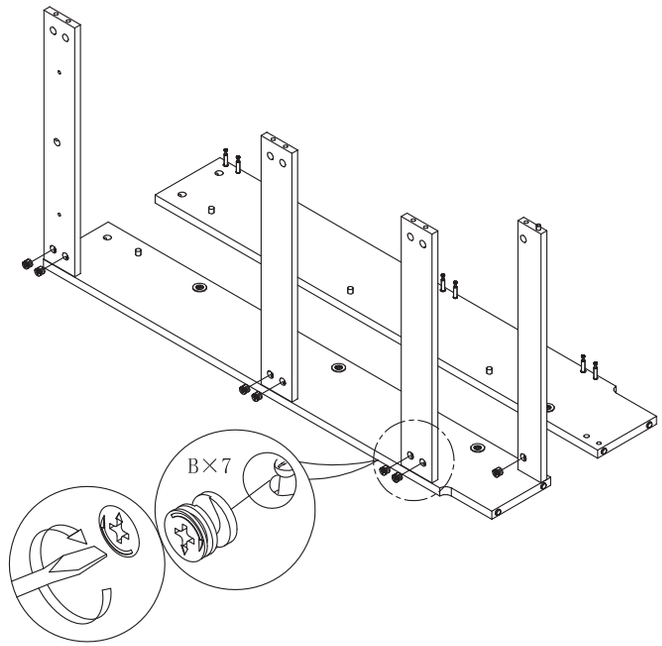

Step 4

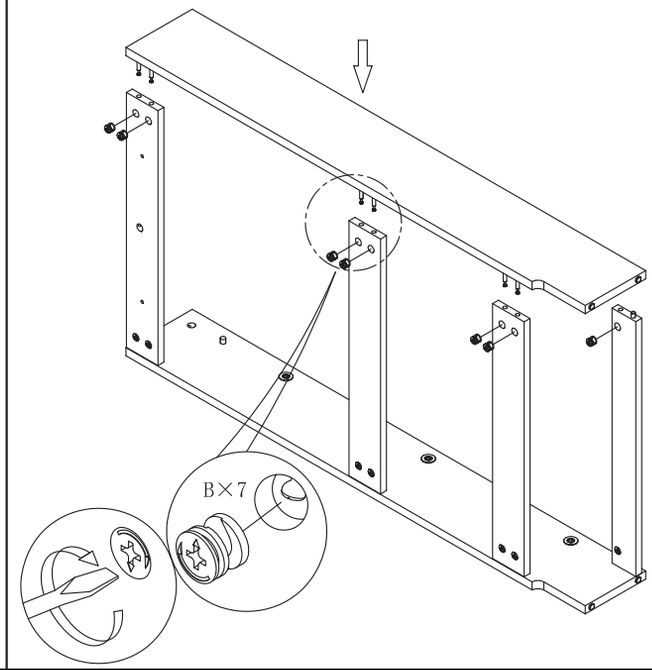

Step 5

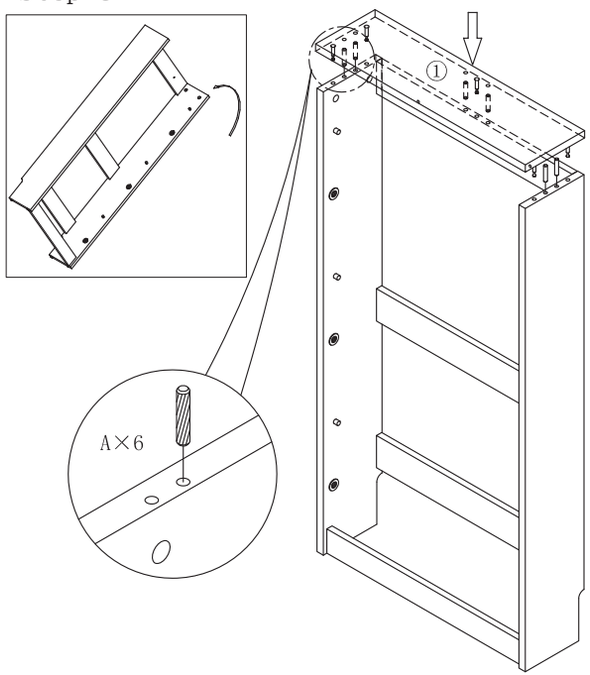

Step 6

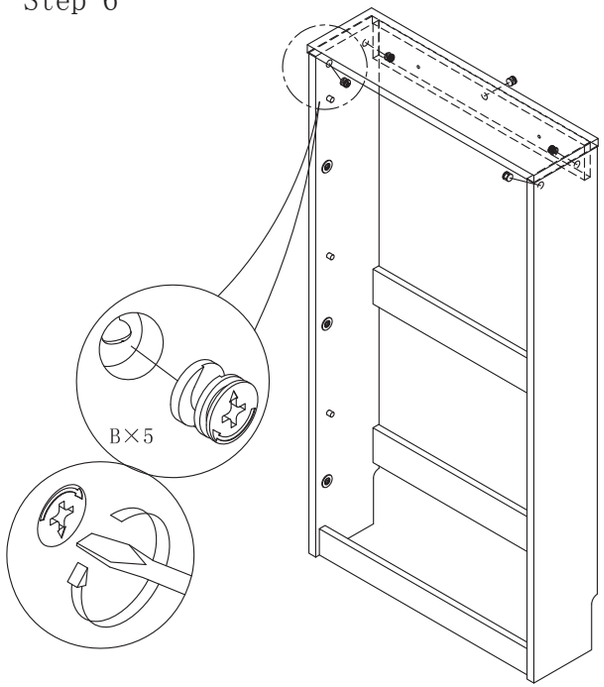

Step 7

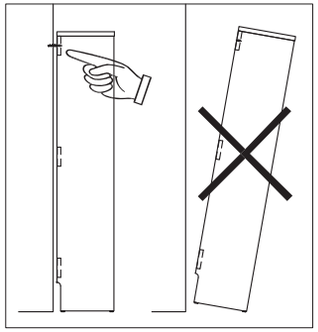

Note: Drill holes in the wall according to the hole position of the back panel, and tap intothe expansion adhesive (H×2). screw in the fiber nail to fix the body of shoe cabinet on the wall

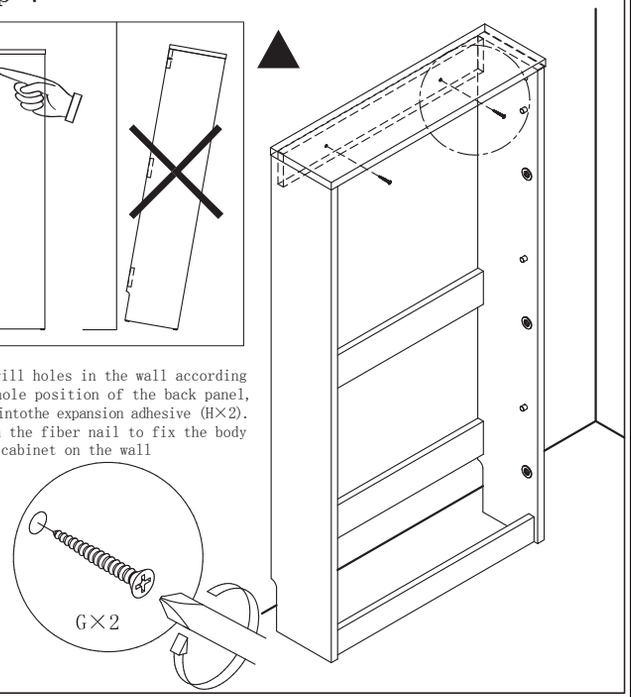

Step 8

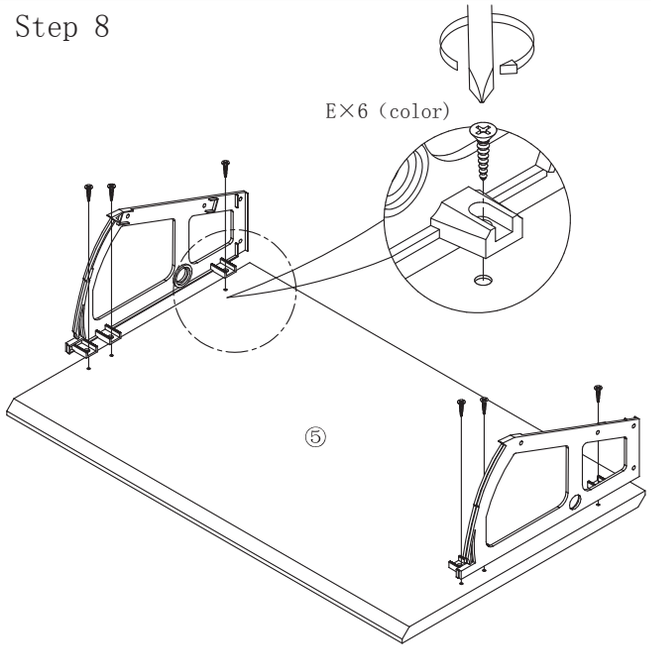

Step 9

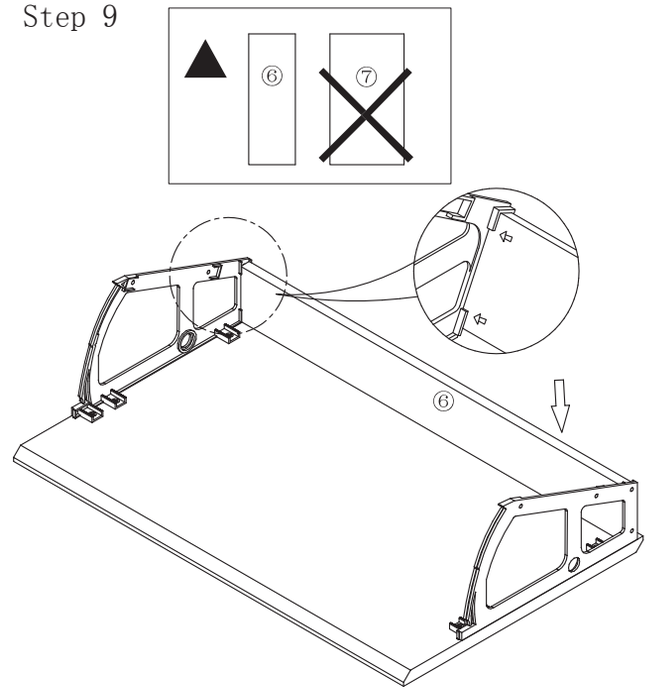

Step 10

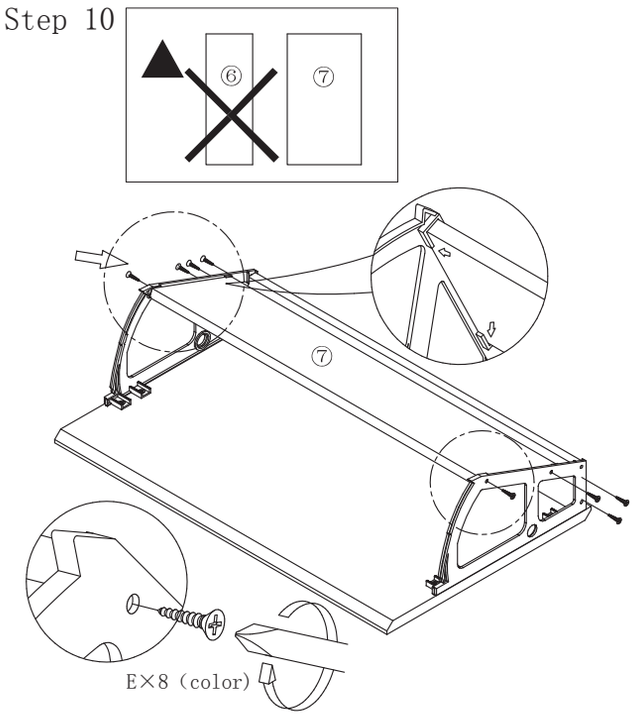

Step 11

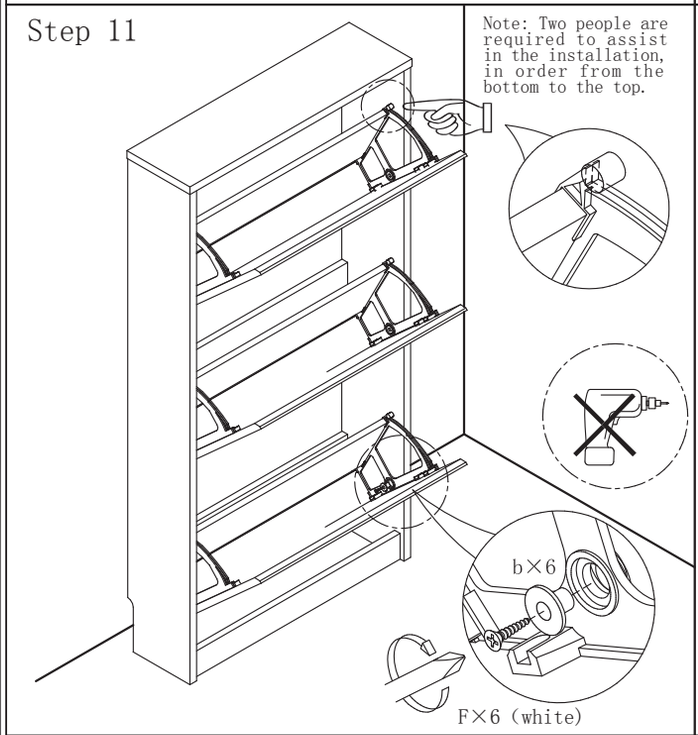
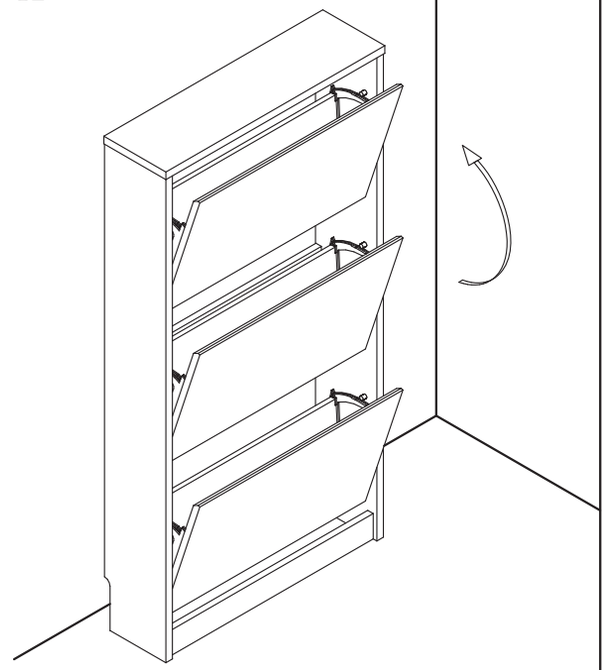
Step 12